ELJAN and HIJAN
CIRCULATOR WATER HEATERS
INSTALLATION, COMMISSIONING & SERVICING INSTRUCTIONS
G.C. No 53 416 11 (ELJAN)
G.C. No 53 416 12 (HIJAN)

Publication No. ZZ 716/5
May 2000

These appliances are tested and certified by B G Technology for use with natural gas only.

IMPORTANT: These instructions are to be read in conjunction with the relevant air heater Installation, Commissioning and Servicing Instructions.

WARNING: THESE APPLIANCES MUST BE EARTHED

1. GENERAL DESCRIPTION

1.1 ELJAN and HIJAN are open flued gas fired circulators which can generate up to 62.5 litres per hour (13.7 gal/h), and 77 litres per hour (16.9 gal/h) of hot water respectively, when installed in a Johnson & Starley air heater. They are suitable for use in gravity fed or fully pumped circuits comprising radiators and/or an INDIRECT cylinder. They may be used in a sealed system application only when fitted with an overheat cutoff device (CK1 kit). If the intention is to use ELJAN or HIJAN with a DIRECT cylinder, then the local Water Authority should first be consulted.

1.2 The gas supply to the main burner is controlled by a multifunctional gas control valve. In addition, an electrically operated solenoid valve is fitted to permit the main burner to be remotely switched on and off. The main burner operates in conjunction with a permanent pilot burner and a thermoelectric sensing device. Pilot ignition is by means of a Piezo unit.

2. TECHNICAL DATA

2.1 **NATURAL GAS.**

	ELJAN	HIJAN
Injector:	Bray Cat. 210/380 1.67 mm Diameter	Amal type 187/001/004. 1.7mm Diameter
Setting pressure:	17.2 mbar (6.9 in wg).	19.0 mbar (7.6 in wg).
Gas rate:	0.42m^3/h (14.85ft^3/h).	0.49m^3/h (17.45ft^3/h).
Input:	4.4kW (15,000Btu/h).	5.25W (17,900Btu/h).
Output:	3.32kW (11,340Btu/h).	3.81kW (13,000Btu/h).

Table 1.
ELJAN and HIJAN Gas configuration

2.2 **WATER.**

	ELJAN	HIJAN
Maximum output: with 44.5°C (80°F) rise.	62.5 litres/h (13.7 gal/h)	77.0 litres/h (16.9 gal/h)

Table 2
ELJAN and HIJAN Maximum Water Output

Maximum water temperature:	77°C (170°F).
User temperature control allows settings below maximum.	
Maximum working head:	20m (65ft).
Minimum circulation head:	610mm (24in) with indirect cylinder, 356mm (14in) with direct cylinder.
Water connections:	Rp $^3/_4$ ($^3/_4$" BSP internal parallel).

2.3 **ELECTRICAL SUPPLY:** 230V, 50Hz connection to solenoid valve via pre-wired plug and lead.

3. GENERAL REQUIREMENTS

3.1 **RELATED DOCUMENTS (refer to current issues).**
This appliance MUST BE installed in accordance with the relevant requirements of the Gas Safety (Installation and Use) Regulations, local Building Regulations, the I.E.E. Regulations and the Bye-laws of the local Water Company. It should also be in accordance with any relevant requirements of the local Gas Region and Local Authority, and the relevant recommendations of the following British Standard Codes of Practice:

BS 6798: Specification for installation of gas fired hot water boilers of rated input not exceeding 60kW.
BS5546: Installation of gas hot water supplies for domestic purposes (2nd family gasses).
BS5440 Pt. 1: Flues.
BS5440 Pt. 2 Air supply.
BS6891: Installation of low pressure gas pipe work up to 28mm (R1) in domestic premises.
BS6700: Design, Installation, testing and maintenance of services supplying water for domestic use within buildings and their curtilages.

3.2 **GAS SUPPLY.** Installation of pipework is to be in accordance with BS6891. Pipework from the gas meter is to be of adequate size, and pipes of a smaller diameter than the appliance are not to be used. The complete installation must be tested for gas soundness, and purged as detailed in BS6891.

3.3 **WATER CIRCULATION SYSTEM.** Detailed recommendations for the water circulation system are given in BS6798, BS5449 (for small bore and microbore central heating systems), and BS5446.

3.3.1 To ensure good circulation in gravity circuits, flow pipes should be designed to run vertically from the water heater before running laterally. Any lateral run should be less than twice the length of the previous vertical run. Pipework
should be installed with a rise towards the vent point.

3.3.2 Drain cocks must be located in accessible positions, which permit the draining of the whole system, including the appliance and hot water storage vessel. A drain cock should be fitted at the lowest point of the water heating circuit and, in the case of an indirect system, another must be fitted at the lowest point of the cold feed. Drain cocks should be at least $^1/_2$ in nominal size, and be in accordance with BS2879.

3.3.3 Economy valves can only be used in a DIRECT installation.

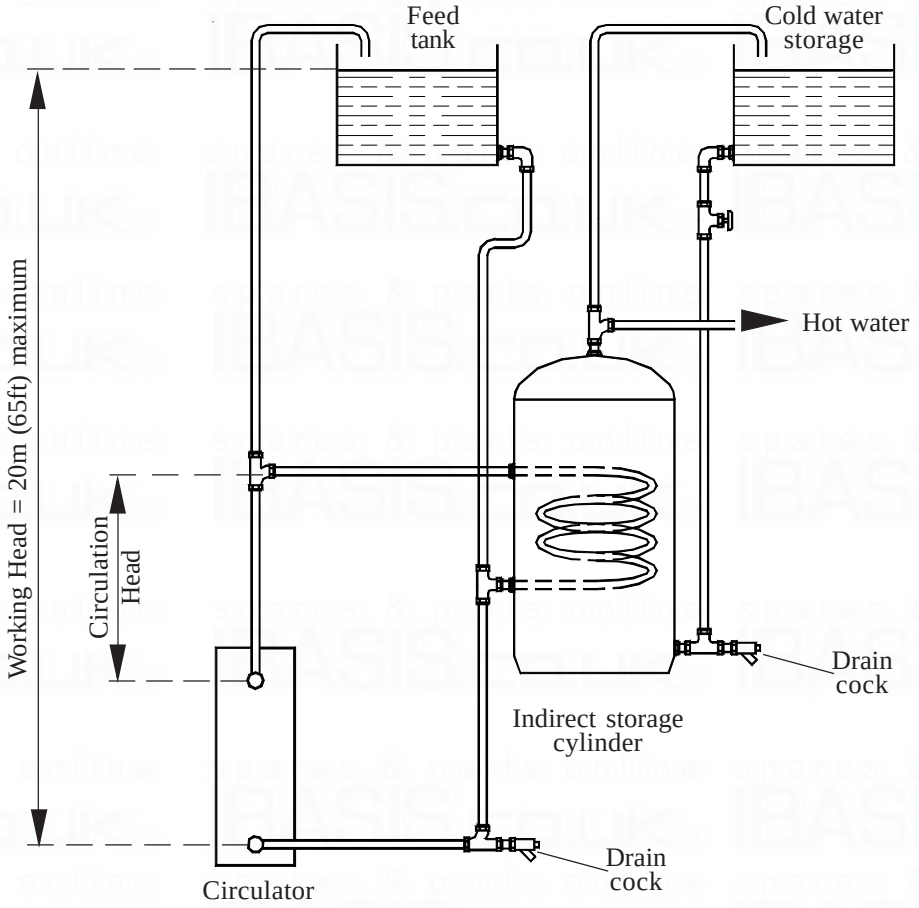

Fig. 1a.
Typical ELJAN and HIJAN Indirect System application.

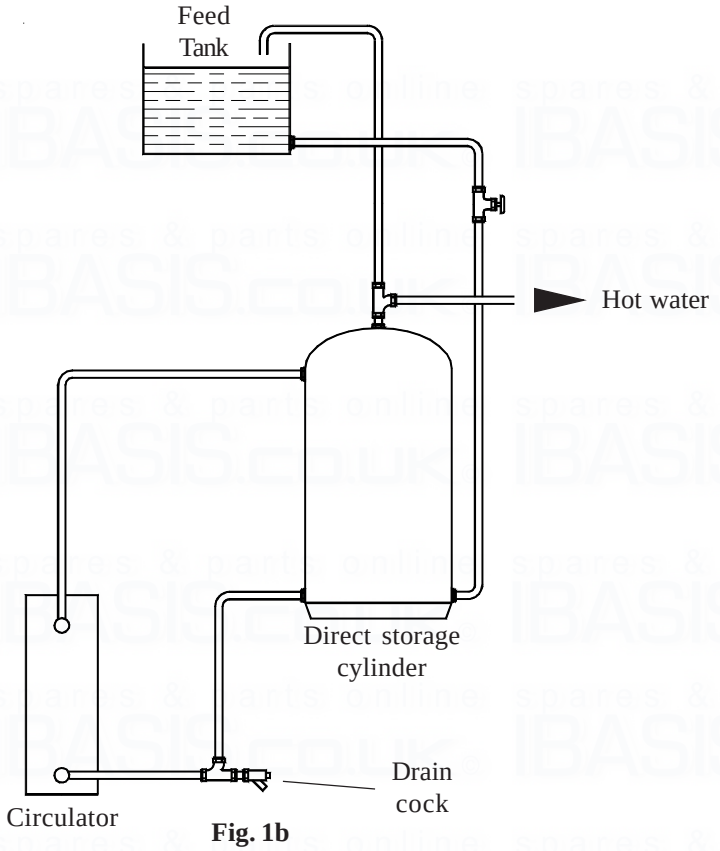

Fig. 1b
Typical ELJAN and HIJAN Direct System application.

3.4 **ELECTRICAL SUPPLY:** Wiring external to the appliance must be in accordance with the Institute of Electrical Engineers (I.E.E.) Regulations (current edition), and any other local regulations which may apply.

4. INSTALLATION

4.1 WATER CONNECTIONS.

4.1.1 Connect 22 mm flow and return pipes (Rp $^3/_4$, $^3/_4$ in BSP) as required, in accordance with the guidelines detailed in Sect 3.3. To facilitate subsequent dismantling of the heat exchanger, use union fittings at the point of connection to the appliance. Ensure that return pipe work does not restrict access to the thermostat phial or the top panel.

4.1.2 **ELJAN and HIJAN in JT 19-25 air heater, and ELJAN in J55-65 air heater:**

a. Use the knockouts provided in the heater cabinet sides for external pipe routing.

b. **Flow connection:** use a suitable length of straight pipe from the flow connection; exit right or left as required.

c. If the return connection is from the left hand side, route the pipe behind the gas supply pipe to facilitate burner bar removal.

4.1.3 **ELJAN in JA33-43 air heater, ELJAN and HIJAN in J15-22, J25-32, JB40-50, MYSON HISPEC 15/20 and MYSON HISPEC 25/32 air heaters:**

a. For side exit: Use the knockouts in the cabinet sides for external pipe routing.

i. Flow connection: (not JB40-50, MYSON HISPEC 15/20 or MYSON HISPEC 25/32) Referring to Fig. 2a, preform suitable length of copper pipe as shown, and connect to exit from either left or right as required.

b. For top exit:

i. Referring to Fig. 2b, preform suitable lengths of copper pipes as shown to fabricate the flow and return pipes.

ii. Remove the white plastic plugs in the top panel and fan compartment floor of the air heater, and feed the flow and return pipes through the holes from below. Ensure the straight ends are fed through first, with the return pipe to the rear.

iii. Firmly tighten the connections at the circulator before completing the connections at the top of the flow and return pipes.

iv. Using good quality ducting tape, seal where the pipes pass through the fan compartment floor and the top panel of the air heater.

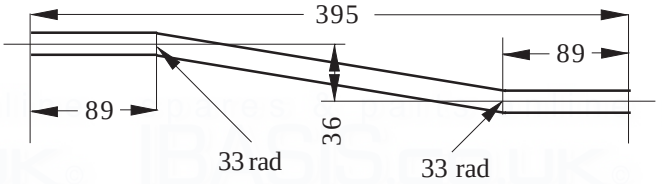

Fig. 2a
Side Exit Flow Connection Pipe (J15-22 and J25-32 heaters only)
(Dimensions in mm)

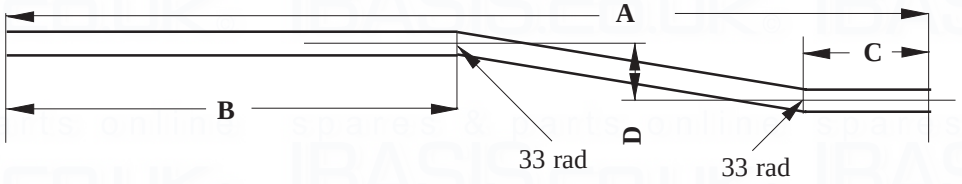

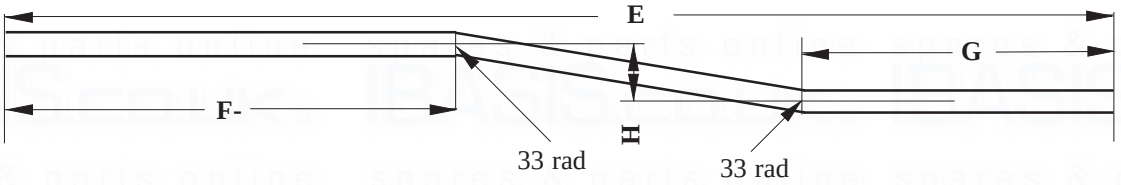

Fig. 2b
Top Exit Flow and Return Connection Pipes

	J15-22 J25-32	JA33-43	JB40-50	HISPEC 15/20 HISPEC 25/32
A	930	1280	735	900
B	630	980	480	650
C	70	70	150	100
D	48	48	10	30
E	1010	1360	825	980
F	710	1060	500	570
G	100	100	200	100
H	50	50	40	65

Table 3
Preformed Flow and Return pipe dimensions (in mm)

4.2 ELECTRICAL SUPPLY.

4.2.1 The following external electrical connections are required. Refer to Fig. 3a, 3b or to the relevant air heater wiring diagram for connection of the circulator (contained within the Air Heater Installation instructions or affixed to the Air Heater).

a. To an external pump, (if fitted). Cable is not supplied.

b. From any external switch or time control to the solenoid valve. Cable is not supplied.

4.2.2 Cable for external connection is to be 3 core, 5 amp (0.75mm^2 csa) PVC sheathed, high temperature resistant to BS6141 conformity.

4.2.3 The air heater terminal block for external connection is located as follows:

a. **JT19-25 Mk 2:** Inside the fan compartment, under the top panel.

b. **J15-22, J23-32 and JA33-43:** In the burner compartment, under the fan compartment floor.

c. **JB40-50 and J55-65:** On the control panel behind the top door.

d. **MYSON HISPEC J15/20 and MYSON HISPEC J25/32:** On the fan compartment floor behind the control panel

4.2.4 External cable is to be routed from the air heater terminal block, along the same path as the mains input cable, and through the same grommets in the top tray and centre diaphragm.
Note: Isolation of the appliance must be provided by a double pole switch having a contact separation of not less than 3mm in both poles.

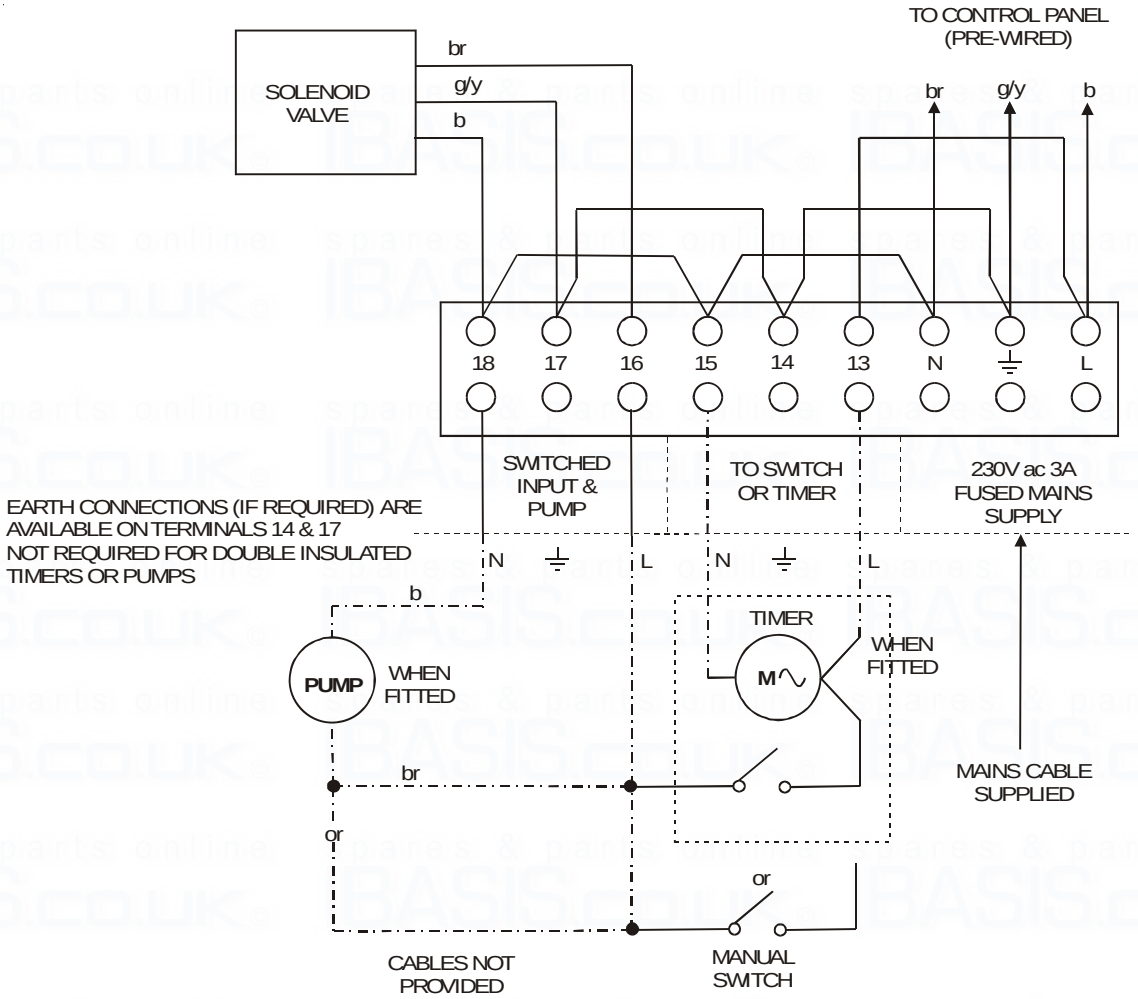

Fig. 3a
Circulator wiring diagram ('J' air heaters)

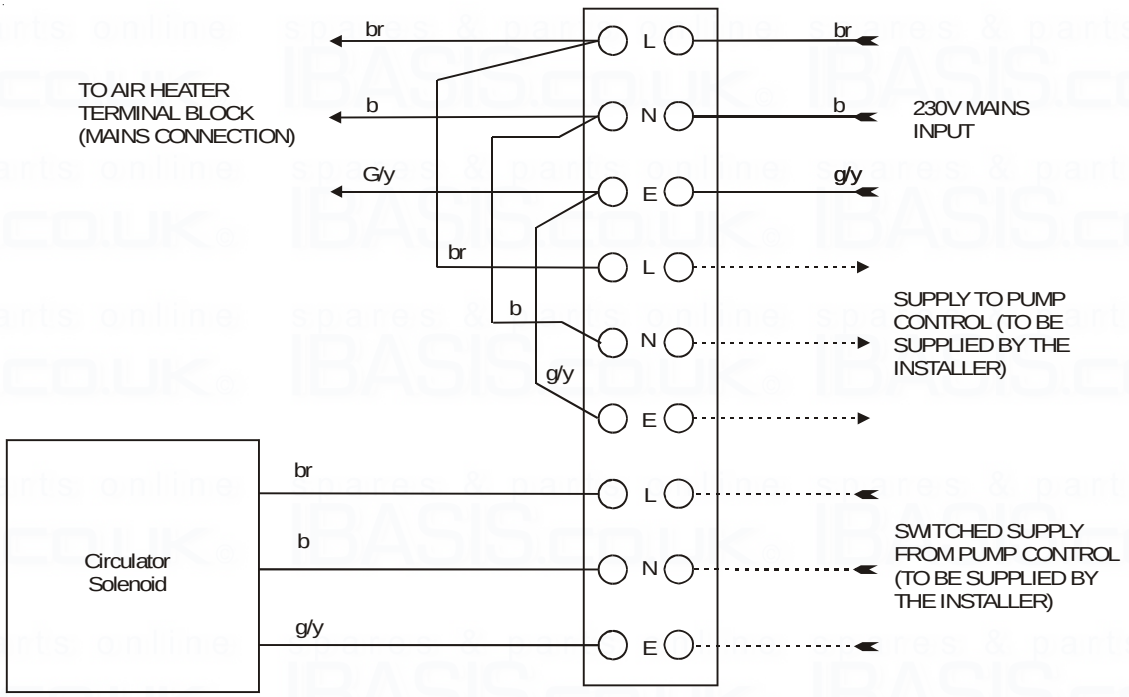

Fig. 3b
Circulator wiring diagram (MYSON HISPEC air heaters)

5.1 With the pump fitted (if required), fill the water circulation system, clear any air locks and check for water soundness.

5.2 Ensure the Thermostat capillary is fully inserted into the pocket in the flow connection of the circulator.

5.3 Ensure that the solenoid coil is firmly secured to the valve body with the plug connection to the left.
Note: If the nylock nut is loose, the coil will overheat and eventually fail.

5.4 ELJAN and HIJAN are factory set to provide a flow temperature of 60°C (140°F). If a higher flow temperature is required, proceed as follows:

5.4.1 Remove Multifunctional control Temperature/Control knob, (this is a push fit only)

5.4.2 Referring to Figs. 4a to 4c, identify stop screws 1 and 2.

5.4.3 Dependant upon the required water temperature, remove:

a. Stop screw 1 to provide a maximum temperature of 68°C (155°F), or,

b. Stop screws 1 and 2 to provide a maximum temperature of 77°C (170°F).

5.4.4 Refit Multifunctional control Temperature/Control knob, ensuring that it fully engages on the valve spindle.

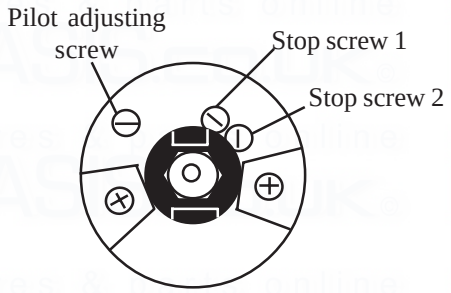

Fig. 4a
Stop screw positions

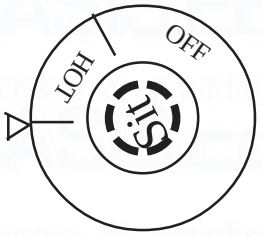

Fig. 4b
Minimum Setting 68°C

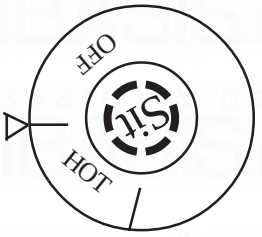

Fig. 4c
Maximum Setting 77°C

Fig. 4
Water Temperature Control Settings

5.5 **GAS PRESSURE SETTING:**

5.5.1 Referring to fig. 5, remove Outlet Pressure Test Point cover and connect Gas Pressure Test Gauge.

5.5.2 Turn the gas supply ON at the gas service cock.

5.5.3 Referring to lighting instruction label, ignite the pilot burner and ensure the pilot flame envelopes the thermocouple tip, adjusting the Pilot Adjusting screw as necessary.

5.5.4 Turn ON the electrical supply to the appliance.

5.5.5 Set the Multifunctional control Temperature/Control knob fully clockwise and ensure the main burner ignites. The appliance will now operate under thermostatic control.

5.5.6 Test the appliance for gas soundness, sealing any leaks found.

5.5.7 Referring to Fig. 5 and Table 1 (para 2.1), set Multifunctional control Pressure Adjuster to provide the required setting pressure for the installation.

5.6 **SYSTEM OPERATION:**

5.6.1 With the appliance ignited, ensure all controls operate correctly.

5.6.2 Carry out spillage test as detailed in the Installation, Commissioning and Servicing instructions for the relevant air heater

5.6.3 Allow system to reach working temperature and switch appliance OFF, rapidly drain and refill the system, clearing any air locks and test for water soundness.

5.6.4 Turn OFF Gas supply cock.

5.6.5 At Multifunctional control, remove Gas Pressure Test Gauge and refit Inlet Pressure cover.

5.6.6 Fit Control Cover.

5.6.7 Turn Gas supply cock ON.

5.6.8 Relight the appliance and set the appliance to the User's requirements.

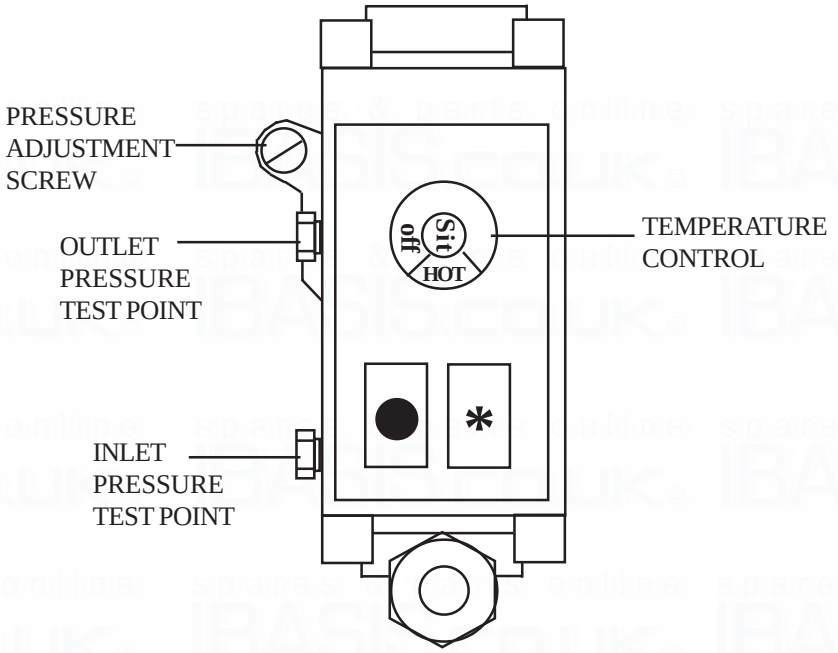

Fig. 5
Multifunctional control Component Identification

6. INSTRUCTIONS FOR USER

6.1 If the building is unoccupied, ensure that the User Instructions (including those for the air heater) are left with the appliance for the user. Leave THESE Installation Instructions with the appliance for use on future service calls.

6.2 If the building is occupied, hand the User Instructions to the occupier and ensure that the user is instructed on the following:

6.2.1 How to use the circulator independently from the air heater.

6.2.2 How to light the appliance.

6.2.3 How to adjust the water temperature.

6.2.4 That the appliance must be serviced at least once a year by a competent person, to ensure efficient and safe operation.

6.2.5 The instructions for safe use have been read and understood.

6.2.6 That if persistent failure of the pilot burner occurs, expert help must be obtained.

6.2.7 What actions to take in an emergency shutdown.

6.2.8 What actions to take if there is an escape of gas, i.e. turn off the gas supply at the gas meter, extinguish any naked flame, ventilate the area, **DO NOT** operate any **electrical switches**, call the emergency service of the local gas authority.

7. MAINTENANCE

IMPORTANT: Ensure gas and electricity supplies are isolated before commencing any maintenance or replacement of components. Upon completion of any maintenance, always test for gas soundness and carry out a complete functional test of the appliance in accordance with Commissioning Instructions at Sect 5.1 to 5.6 inclusive.

7.1 ROUTINE MAINTENANCE

7.1.1 Operate the appliance and check for the correct function of the burner and controls.

7.1.2 Remove and inspect the Burner and Control Assembly, removing and cleaning the main burner, pilot burner and injectors as required. **Do not** attempt to clear obstructions with wire or similar tools.

7.1.3 Inspect the Thermocouple and ignition lead for signs of damage, cleaning or replacing as required.

7.1.4 Inspect the Heat Exchanger flueways, clean by brushing from above and below and taking care to avoid damaging the surrounding insulation. Remove debris from the Heat Exchanger and Burner aperture using a vacuum cleaner or air duster. Clean any debris from the heat shield at the base of the appliance.

7.1.5 Ignite the appliance and test for gas soundness.

7.1.6 Recommission the appliance in accordance with section 5 of these instructions.

7.1.7 Ensure the appliance and controls are operating correctly.

7.1.8 Carry out spillage test to ensure flue products are clearing satisfactorily.

7.2 BURNER AND CONTROLS ASSEMBLY REMOVAL:

7.2.1 Ensure that the gas supply is turned OFF at the supply cock, and the electrical supply is isolated.

7.2.2 Remove the lower front door of the air heater.

7.2.3 Disconnect the ignition lead from the Piezo unit.

7.2.4 Withdraw the retaining plug from thermostat pocket and remove thermostat phial, taking care to avoid damage to the thermostat.

7.2.5 Disconnect gas feed pipe from the appliance.

7.2.6 Release Burner Mounting Screw and withdraw burner and control assembly.

7.2.7 Release the nylock nut and washer from the solenoid coil, and remove the solenoid coil and plug from the solenoid valve.

7.2.8 Refitment or replacement is in reverse order, ensuring that:

a. Lug on rear of main burner engages into the bracket at the rear of the appliance body.
b. When refitting thermostat phial care is taken to avoid damaging the phial.
c. The solenoid coil is refitted with the electrical lead to the left.
d. The thermostat capillary and retaining clip are secured using the Burner Mounting Screw.

7.3 PILOT ASSEMBLY REMOVAL:

7.3.1 Remove the Burner and controls assembly as detailed in para 7.2

7.3.2 Disconnect the ignition lead from the electrode.

7.3.3 Release the 2 x screw securing Pilot assembly, and withdraw the pilot assembly from the main burner mounting bracket.

7.3.4 Release the 4mm hook and olive connection from the pilot injector.

7.3.5 Release the thermocouple connection from the Multifunctional control.

8.2.6 Refitment or replacement is in reverse order, ensuring that the thermocouple connection at the Multifunctional control is not overtightened (finger tight + ¼ turn only), and the relationship between the pilot assembly and the Main burner is as shown in fig. 6.

7.4 MAIN BURNER AND MAIN INJECTOR REMOVAL:

7.4.1 Remove the Burner and Controls assembly as detailed in para 7.2

7.4.2 Remove the Pilot Assembly as detailed in para 7.3

7.4.3 Release the main burner lock nut, and unscrew the main burner from the injector housing.

7.4.4 Unscrew the main injector from the injector housing.

7.4.5 Refitment or replacement is in reverse order, ensuring that the main burner is screwed in as close as possible to the injector shoulder, and the relationship between the pilot assembly and the Main burner is as shown in fig. 6.
NOTE: If burner is not vertically aligned, the burner and control assembly will not fit into the water body for re-assembly.

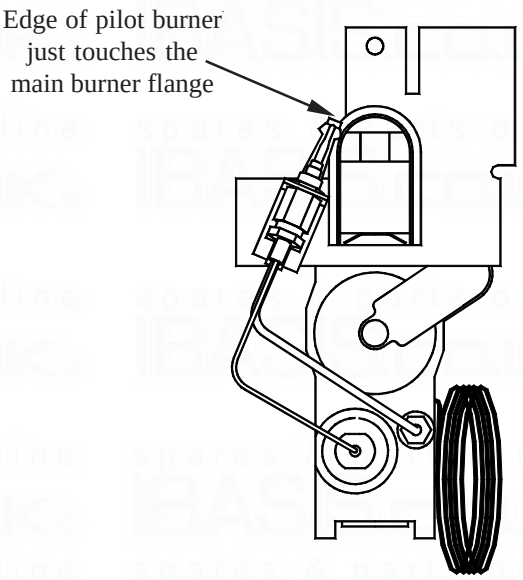

Fig. 6
Pilot assembly to Main burner relationship

7.5 HEAT EXCHANGER ASSEMBLY INSPECTION & ACCESS:

7.5.1 Remove the Burner and Controls assembly as detailed in para 7.2

7.5.2 **J15-22, J25-32 and JA33-43 Air Heaters only:** Release the downdraught deflector plate securing screw from the air heater bulkhead, and withdraw the deflector plate from the heater cabinet circulator compartment.

7.5.3 Release the circulator top panel securing screw and withdraw the circulator top panel.

7.6 MULTIFUNCTIONAL CONTROL REMOVAL:

7.6.1 Remove the Burner and Controls assembly as detailed in para 7.2

7.6.2 Remove the Pilot assembly as detailed in para 7.3.

7.6.3 Disconnect the pilot feed pipe and thermocouple capillary from the Multifunctional control.

7.6.4 Release the 4 x screw securing the Solenoid Valve to the Multifunctional Control.

7.6.5 Refitment or replacement is in reverse order, ensuring replacement 'O' ring seal, and transfer of the data badge in the event of replacement.

7.7 CIRCULATOR BODY REMOVAL:

7.7.1 Gain access to the Heat Exchanger as detailed in para 7.5

7.7.2 Drain down the water system and disconnect the flow and return connections from the circulator.

7.7.3 Release the 2 x screws securing the circulator to the air heater bulkhead and withdraw the circulator body from the air heater cabinet.

7.7.4 Refitment or replacement is in reverse order.

7.8 SOLENOID VALVE REMOVAL:

7.8.1 Remove the Burner and Controls assembly as detailed in para 7.2

7.8.2 Remove the Pilot assembly as detailed in para 7.3

7.8.3 Remove the Multifunctional control as detailed in para 7.6

7.8.4 Remove the Main Burner and its associated locknut as detailed in para 7.4.1 to 7.4.3

7.8.5 Release the support bracket lock nut, and remove the support bracket and lock nut from the injector housing.

7.8.6 Remove the injector housing and copper washer from the solenoid valve, discarding the copper washer.

7.8.7 Refitment or replacement is in reverse order.
NOTE: When replacing or refitting a solenoid valve, a new 'O' ring seal and copper washer are to be fitted.

7.9 SOLENOID COIL AND PLUG REPLACEMENT:

7.9.1 Ensure the gas supply is turned OFF at the supply cock, and the electrical supply is isolated.

7.9.2 Release the nylock nut securing the solenoid coil to the solenoid valve, and withdraw the coil.

7.9.3 Release the screw securing the electrical plug to the solenoid coil and disconnect the plug.

7.9.4 Disconnect the electrical cable from the air heater terminal block.

7.9.5 Refitment or replacement is in reverse order, ensuring that the nylock nut is fully tightened.
Note: If the nylock nut is loose, the coil will overheat and eventually fail.

IMPORTANT: If an electrical defect occurs after installation of the appliance, preliminary earth continuity, polarity, and resistance to earth checks should be carried out with a multimeter. On completion of any maintenance/fault-finding task that has required the breaking and remaking of electrical connections, then checks of continuity, polarity, and resistance to earth must be repeated.

NOTE: When purging or checking gas supplies ensure that, there is adequate ventilation to the room or cupboard, and all naked lights are extinguished.

	SYMPTOM		POSSIBLE CAUSE	RECTIFICATION
a.	Pilot fails to light.	i	No gas supply to water heater.	Check for gas at inlet pressure test point on Multifunctional control.
		ii	Gas supply not purged.	Purge gas supply pipe in accordance with BS6891.
		iii	Pilot injector orifice restricted.	Clean pilot orifice or replace pilot injector.
		iv	Piezo faulty.	Check/replace piezo unit, lead or pilot burner assembly.
b.	Pilot fails to remain lit.	i	Thermocouple to multifunctional control insecure.	Check connection and secure as required.
		ii.	Multifunctional control faulty.	Replace.
		iii.	Thermocouple faulty.	Replace.
		iv.	Pilot flame too small.	Adjust.
c.	Main burner fails to light	i.	OFF button accidentally depressed.	Press 'OFF' button, wait for loud click (approx. 3 minutes) and repeat lighting procedure.
		ii	Solenoid valve not opening	Prove electrical supply to solenoid valve, replace solenoid valve.
		iii	Thermostat overheat.	Draw off hot water from system to allow thermostat to cool, and ensure burner lights.
		iv	Thermostat defective.	Replace Multifunctional control.
d.	Thermostat noisy.	i	Thermostat coil loose.	Secure the solenoid valve coil.
		ii	Solenoid coil defective.	Replace solenoid coil.
e.	Insufficient hot water.	i.	Burner operation cycle too short due to incorrect plumbing.	Check plumbing, in particular lateral runs.
f.	Water temperature outside usable range.	i.	Thermostat out of calibration.	Set thermostat for required water temperature or replace Multifunctional control.
		ii.	Gas rate incorrect.	Check burner pressure, main injector for blockage, replace main injector if faulty.
		iii	Thermostat phial or capillary damaged.	Replace Multifunctional control.

IMPORTANT: If a faulty heater control may have resulted in excessively high water temperatures, (above 85°C, 185°F), the hot water cylinder should be checked to establish whether it is a SELF-PRIMING type. If so, the circuit should be drained and refilled to ensure that the air seal between the primary and secondary circuits in the cylinder is properly established.

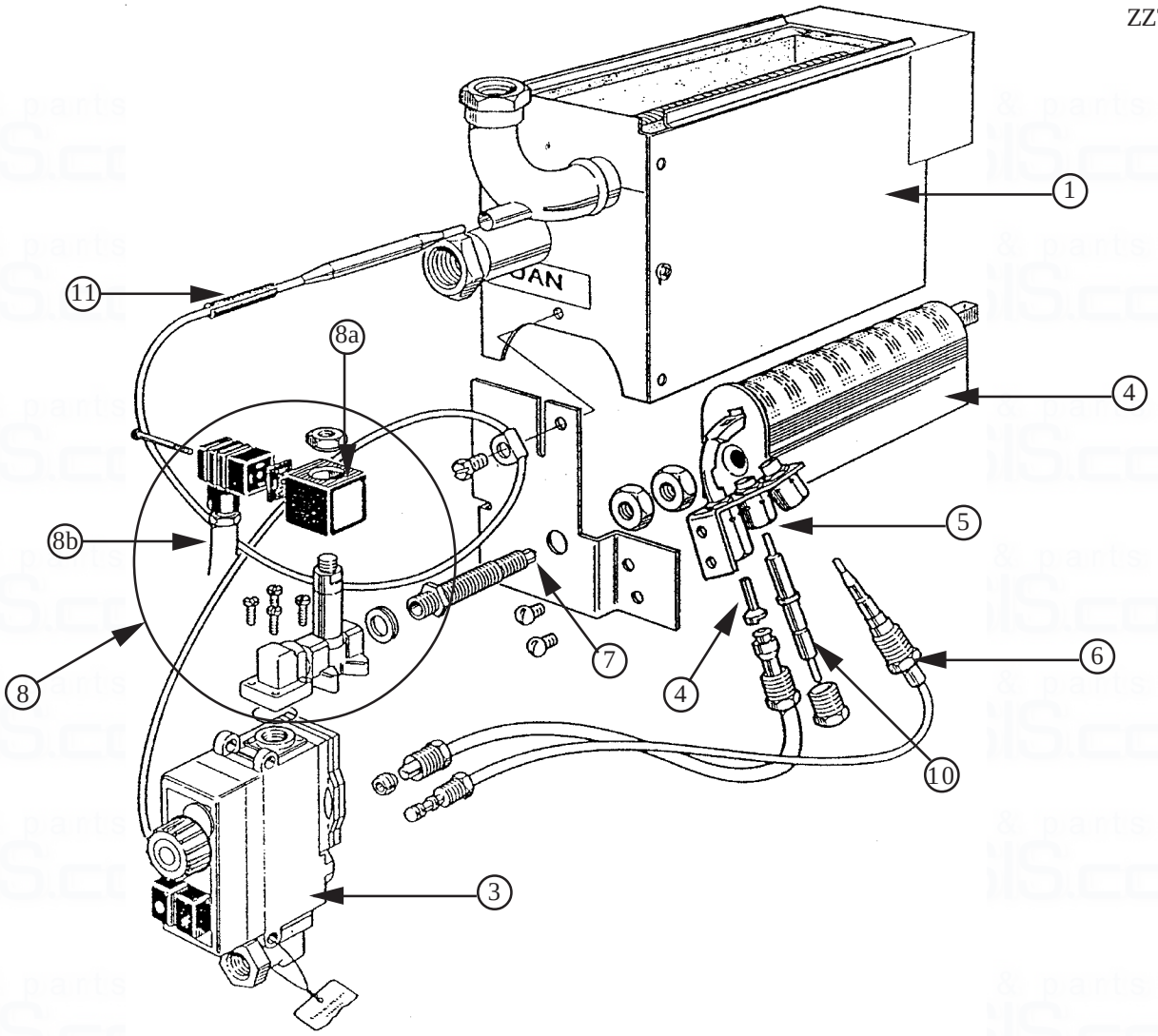

10. **SHORT LIST OF SPARES**

Key	G.C. No	J&S Part No	Description	Qty	
1	242 279	S00102	Main Body Assembly	1	
2	244 879	S00280	Burner and Controls Assembly ELJAN	1	or
	244 877	S00281	Burner and Controls Assembly HIJAN	1	
3	244 878	S00301	Multifunctional Control Mini SIT	1	
	381 670	S00260	'O' Ring Seal	1	
4	384 615	BOS 00562	Burner Arm	1	
5	244 880	BOS 02397/1	Pilot Burner Assembly	1	
	392 935	1000-0701260	Pilot Injector	1	
6	381 671	BOS 02401	Thermocouple	1	
7	244 881	S00296	Main Injector Bray Cat 960/380 (ELJAN)	1	or
	244 899	S00302	Main Injector Amal 187/001/004 (HIJAN)	1	
8	244 882	S00257	Solenoid valve Assembly	1	
8a	381 681	S00258	Solenoid valve Coil	1	
8b	244 895	S00259	Solenoid plug and lead assembly	1	
9	395 720	BOS 01970	Igniter electrode	1	
	245 321	S00437	Pilot feed kit	1	
10	397 819	BOS 02394	Igniter lead	1	
11	230 328	1000-2500070	Thermostat phial retaining plug	1	

Johnson and Starley prides itself on its ability to supply spare parts quickly and efficiently. If your service engineer indicates a problem in obtaining a spare part, advise him to contact Johnson and Starley Spares Department at the address below.

Telephone: 01604 762881

Fax : 01604 767408

JOHNSON AND STARLEY Ltd.,
Rhosili Road,
Brackmills,
Northampton NN4 7LZ